NOTICE
The information disclosed herein was originated by and is the property of BIRNS Inc. Except for uses which may be agreed upon, BIRNS Inc. reserves all patent, proprietary, design, use, sale, manufacturing and reproduction rights in and to said information and this document.

NOTES:
1. APPLY A LIGHT COAT OF ITEM 12 TO O-RINGS PRIOR TO ASSEMBLY.
2. SEE TABLE 1 FOR LAMP OPTIONS.
3. SEE TABLE 2 FOR LENS OPTIONS.
4. PRESSURE RATING: 4500PSI (10K FSW).

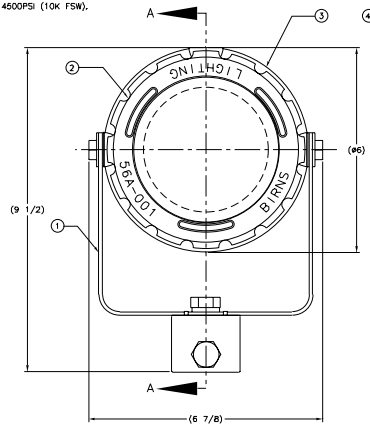

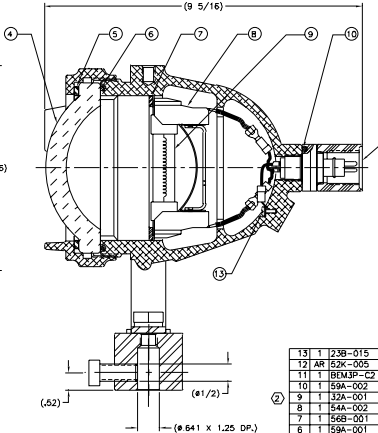

SECTION A–A

REVISIONS				
ZONE	LTR	DESCRIPTION	DATE	APPROVED
	A	DWG NO. WAS 5503-AD PART NOS. UPDATED	861001	J.BROWN
	B	DELETED PART NO. 11-14 & 16 ALTERED LETTERING DE1.1, ALTERED	871101	J.BROWN
	C	DWG UPDATED	880201	J.BROWN
	D	REPOSITIONED GROUND WIRE	981116	E.BIRNS

ITEM	QTY	PART NO.	DESCRIPTION	MATERIAL	SPEC
13	1	23B-015	PAN SLOT, 6-32 X 3/16	SS	18-8
12	AR	52K-005	GREASE	SILICONE	FOOD GD
11	1	BEM3P-C2	BEM3P-C2 CONNECTOR	GRE	CONC E-484
10	1	59A-002	O-RING, 2-213	BUNA	N674-70
9	1	32A-001	LAMP, DXW, 120V/1000W	QUARTZ	COMMERCIAL
8	1	54A-002	REFLECTOR ASSY., SNOOPER	ALUMINUM	3002.0
7	1	56B-001	SNAP-RING, N5000-400-H	S.S.	PHIS-7 MDL
6	1	59A-001	O-RING, 2-246	BUNA	N674-70
5	1	59B-001	LENS GASKET	BUNA	N674-70
4	1	35A-001	LENS, CLEAR	BOROSILICATE	COMMERCIAL
3	1	28A-001	HOUSING, SOOPER WITHOUT GRIP	ALUMINUM	ASTM356-T6
2	1	56A-001	LENS RING, SNOOPER	ALUMINUM	ASTM356-T6
1	1	44A-003	YOKE ASSY, SNOOPER/SNOOPERWIDE	S.S.	304

PARTS LIST

PART NO.	DESCRIPTION
32A-001	3200K, 120V/1000W
32A-002	3400K, 120V/1000W
32A-005	3250K, 120V/600W
32A-009	2900K, 120V/400W
32A-010	2900K, 120V/300W
32A-016	240V/1000W
32A-015	3200K, 240V/800W
32A-017	240V/600W
32A-018	240V/650W

TABLE 1

PART NO.	COLOR
35A-001	CLEAR
35A-002	BLUE
35A-003	FROST
35A-004	BLUE FROST

TABLE 2

MATERIAL
TREATMENT
FINISH

NEXT ASSY | USED ON
APPLICATION

UNLESS OTHERWISE SPECIFIED: DIMENSIONS ARE IN INCHES
TOLERANCES:
ALL FINISH PLATING
.XXXX = ±.0005
.XXX = ±.005
.XX = ±.010
.X = ±.010
ANGLES ± 1/2°
FRACTIONS ± 1/32
MACHINED: ±.005
ROUGHING: ±.007
METRIC: ±.5
BREAKS, ROUGH UP
BURRS, MAX. .001
BEND RAD 0 IN ALL CORNERS
BREAK ALL SHARP EDGES .005-.015
RADIUS, BLEND ALL CHAMFERS
FILLET RADII TO BE .015

CONTRACT NUMBER

		DATE
DRAWN	W.WANG	950918
CHECK	J.KO	950921
ENGR	W.WANG	950918
DR	J.MACLAQUE	950921
APPROVED	E.BIRNS	961005

BIRNS

TITLE
SNOOPER, UNDERWATER LIGHT ASSY

SIZE D | CAGE CODE 58608 | DWG NO. 55670110
SCALE 1/1 | UNIT WT. | 4 LB. | SHEET