BIRNS

MILLENNIUM SERIES

3R-FR

RECOMMENDED MOUNTING CONFIGURATION

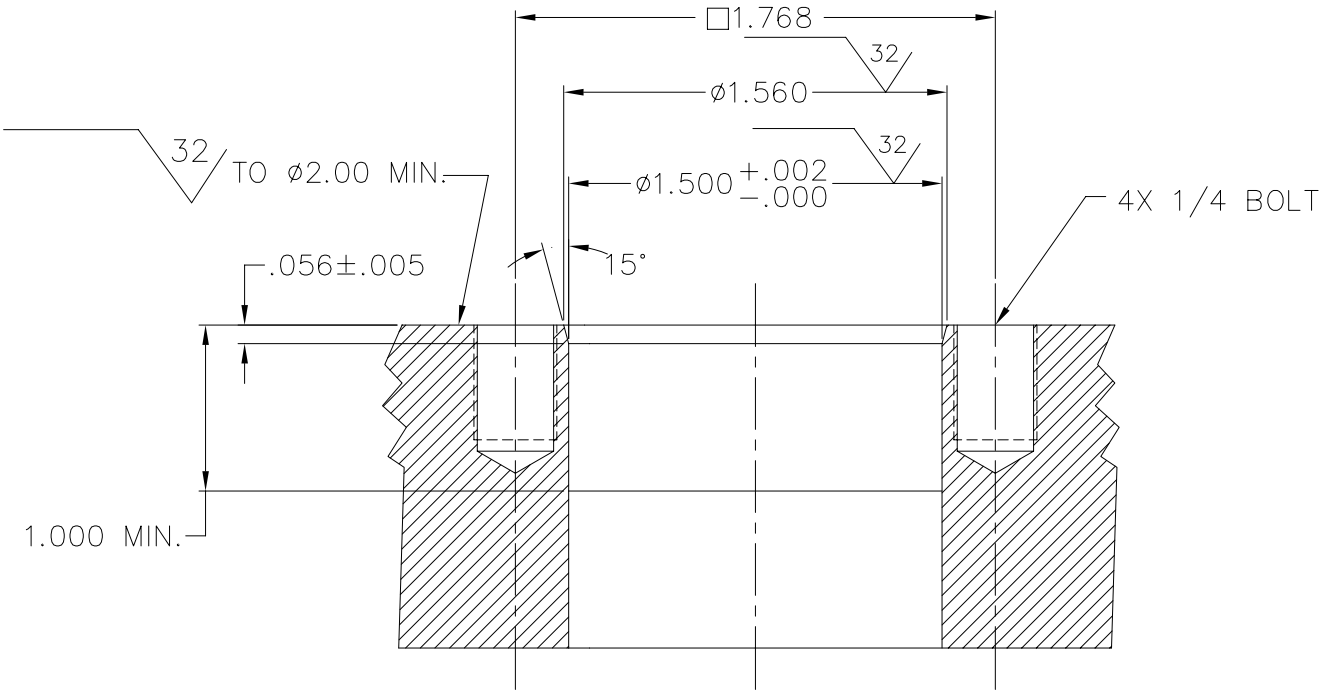

BULKHEAD
THRU-HOLE

1720 Fiske Place Oxnard, California 93033-1863
Phone: (805) 487-5393 FAX: (805) 487-0427 Email: service@ birns.com
www.birns.com

USA Toll-Free:
888-BIRNS-88

SPECIFICATIONS SUBJECT TO CHANGE WITHOUT NOTICE.